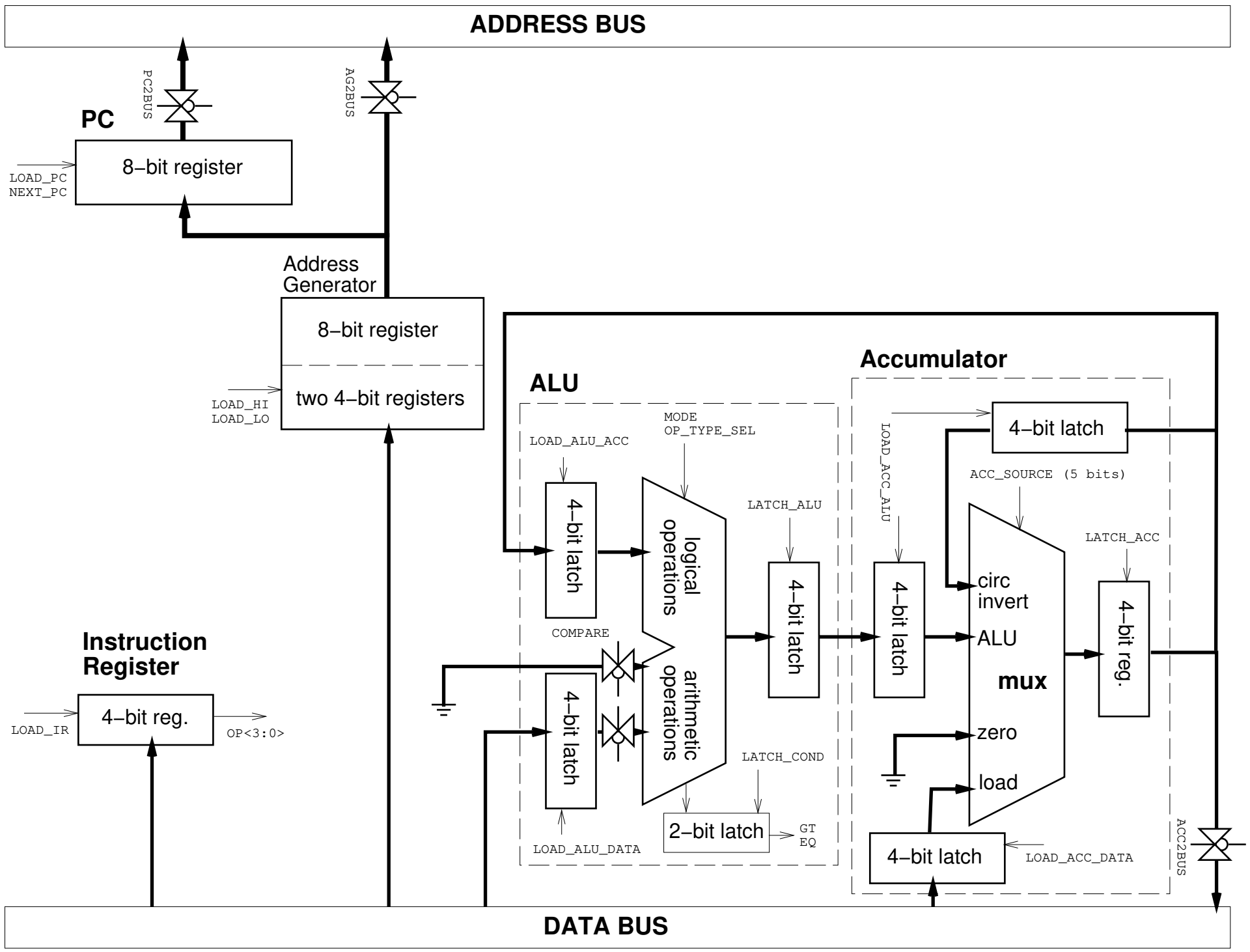
ADDRESS BUS
PC
PC2BUS
AG2BUS
8–bit register
LOAD_PC
NEXT_PC
Address Generator
8–bit register
two 4–bit registers
LOAD_HI
LOAD_LO
ALU
LOAD_ALU_ACC
MODE
OP_TYPE_SEL
4–bit latch
logical operations
arithmetic operations
LATCH_ALU
4–bit latch
COMPARE
4–bit latch
LATCH_COND
2–bit latch
GT
EQ
LOAD_ALU_DATA
Accumulator
4–bit latch
LOAD_ACC_ALU
ACC_SOURCE (5 bits)
LATCH_ACC
4–bit latch
circ invert
ALU
mux
zero
load
4–bit reg.
4–bit latch
LOAD_ACC_DATA
ACC2BUS
Instruction Register
4–bit reg.
LOAD_IR
OP<3:0>
DATA BUS